NIS Physics and Mathematics in Shymkent

SIMULATION-ASSISTED OPEN INQUIRY LEARNING MODEL IN TEACHING PHYSICS

Effects on students' conceptual understanding and problem-solving skills.

ARGUELLES, PRINCESS T.
BOKHANOVA, NURGUL S.
KENENBAYEVA, AINUR A.

ASTANA 2022

Problem

Average score and task completion percentage in Paper 1

Task description

Defining the lens length using the lens-maker formula :

$$\frac{1}{F} = \left(\frac{n - n_0}{n_0}\right)\left(\frac{1}{R_1} - \frac{1}{R_2}\right)$$

Ave. Score Across NIS

0.2

(max = 1)

Task Completion Percentage

21.94

Students deem the lens-maker formula the most difficult to answer in the NIS External Summative Assessment for SY 2020-2021.

In Component 1, only 21.94% of the Grade 12 students answered the question on the application of the lens-maker formula correctly.

INTRODUCTION

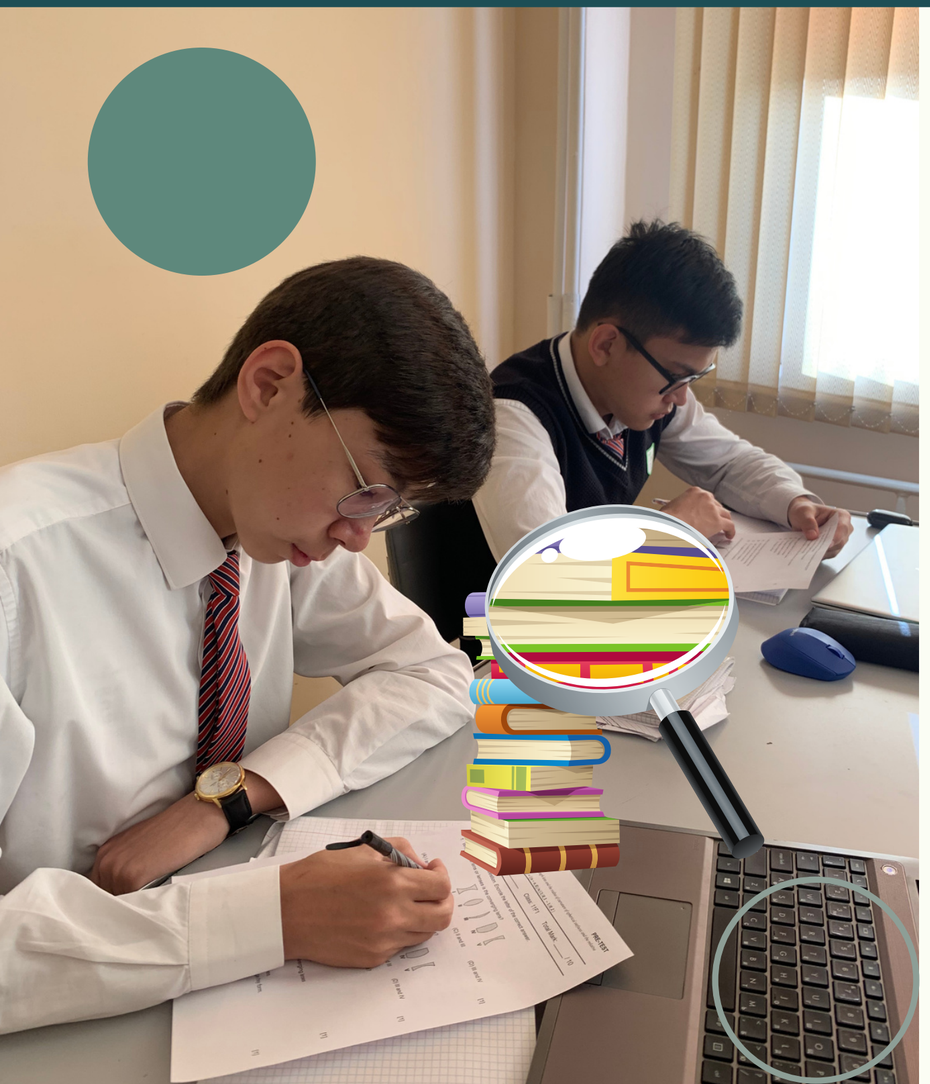

- Rooted on a constructivist approach, open inquiry emphasizes the active role of the learners as they seek to acquire knowledge.
- Physics learners often face a lot of concepts and phenomena they deem too complex to grasp.
- Factors influence students' performance in Physics: teaching strategies, learning environment, motivation, epistemological beliefs, and learning attitudes toward Physics.

OPEN-INQUIRY LEARNING MODEL

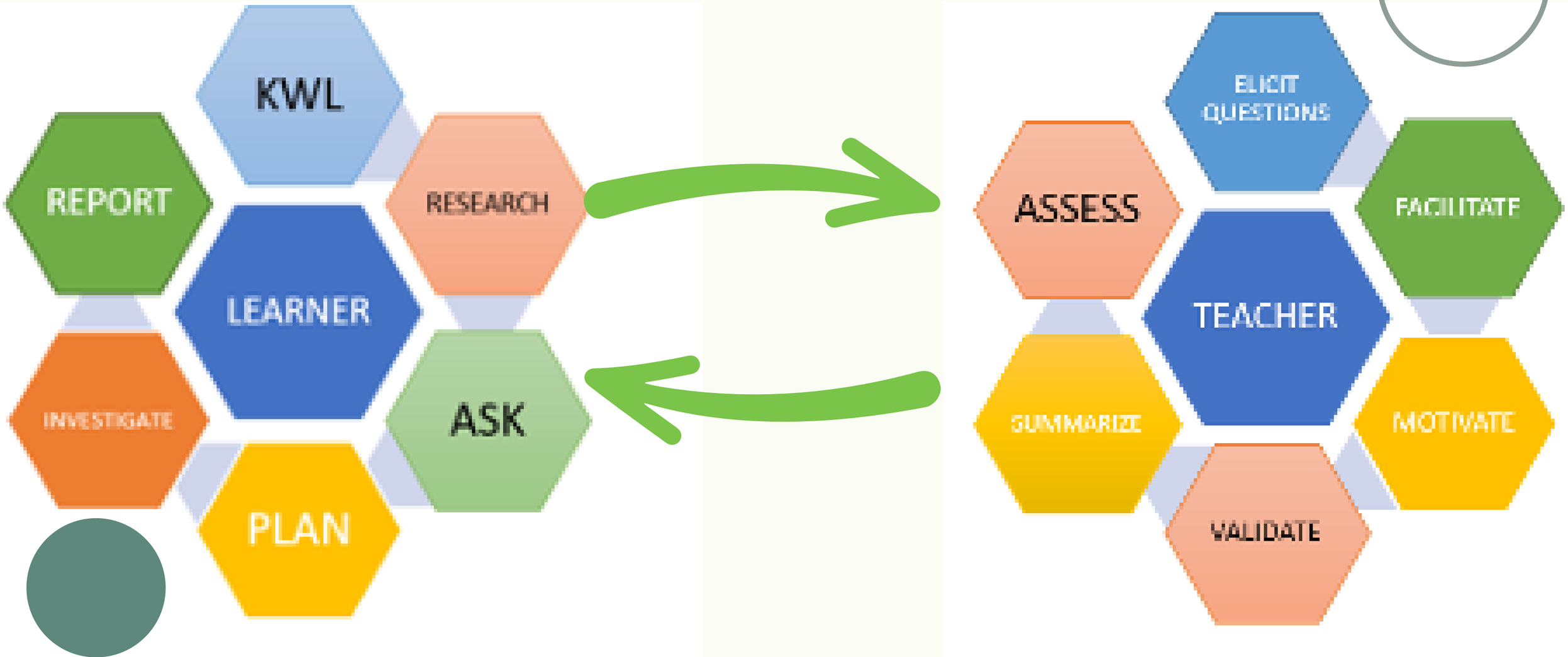

PURPOSE

This study investigated how exposure to the Simulation-Assisted Open Inquiry Learning Model in Physics impacts students' conceptual and mathematical understanding of the concept of lens maker equation. Specifically, the researchers sought to address the following problems:

- What is the Grade 11 Kazakh Group's motivation profile in learning Physics?
- Is there a significant difference in the student's conceptual understanding and problem-solving skills before and after the intervention? How does their conceptual understanding compare from the pre-test to the post-test?

Methodology

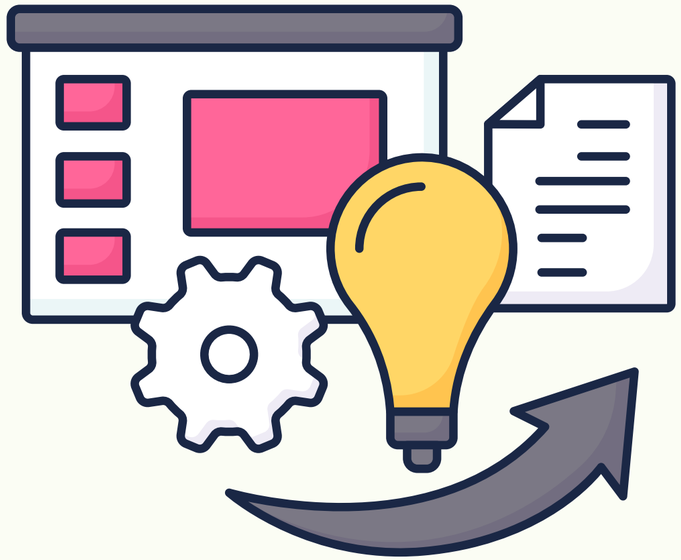

Research Design

- Plan-Do-Study-Act PDSA Model of Action Research
- Pretest-posttest quasi-experimental design using quantitative approaches

Location and Participants

- NIS FMD Shymkent
- Participants in the study were determined through cluster sampling
- 24 participants were involved, eighteen (18) male, and four (4) female

Implementation: The PDSA Model

Plan

- Corresponding with the proponent of the model.
- Co-planning for the lesson.

Do

- Team-Teaching
- Motivation Scale Survey, Pretest, KWL, Open-Inquiry Method using Simulation, Post-Test , Reflection

Study

- Glynn Physics Motivation Scale II Analysis
- Hake normalized gain for Pre-test and Post-test
- Analysis of KWL Chart and Focused Group DIscussion (FGD)

Act

- The basis for professional goals and pedagogical improvement in the Physics Department.

RESEARCH RESOURCES

GLYNN MOTIVATION QUESTIONNAIRE II

SCIENCE MOTIVATION QUESTIONNAIRE II (SMQ-II)

© 2011 SHAWN M. GLYNN, UNIVERSITY OF GEORGIA, USA

In order to better understand what you think and how you feel about your science courses, please respond to each of the following statements from the perspective of "When I am in a science course…"

Statements	Never 0	Rarely 1	Sometimes 2	Often 3	Always 4
01. The science I learn is relevant to my life.					
02. I like to do better than other students on science tests.					
03. Learning science is interesting.					
04. Getting a good science grade is important to me.					
05. I put enough effort into learning science.					
06. I use strategies to learn science well.					
07. Learning science will help me get a good job.					

Note. The SMQ-II is copyrighted and registered. Go to **http://www.coe.uga.edu/smq/** for permission and directions to use it and its discipline-specific versions such as the Biology Motivation Questionnaire II (BMQ-II), Chemistry Motivation Questionnaire II (CMQ-II), and Physics Motivation Questionnaire II (PMQ-II) in which the words *biology*, *chemistry*, and *physics* are respectively substituted for the word *science*. Versions in other languages are also available.

WOLFRAM SIMULATION

https://demonstrations.wolfram.com/LensmakersEquation/

Lensmaker's Equation

BETA

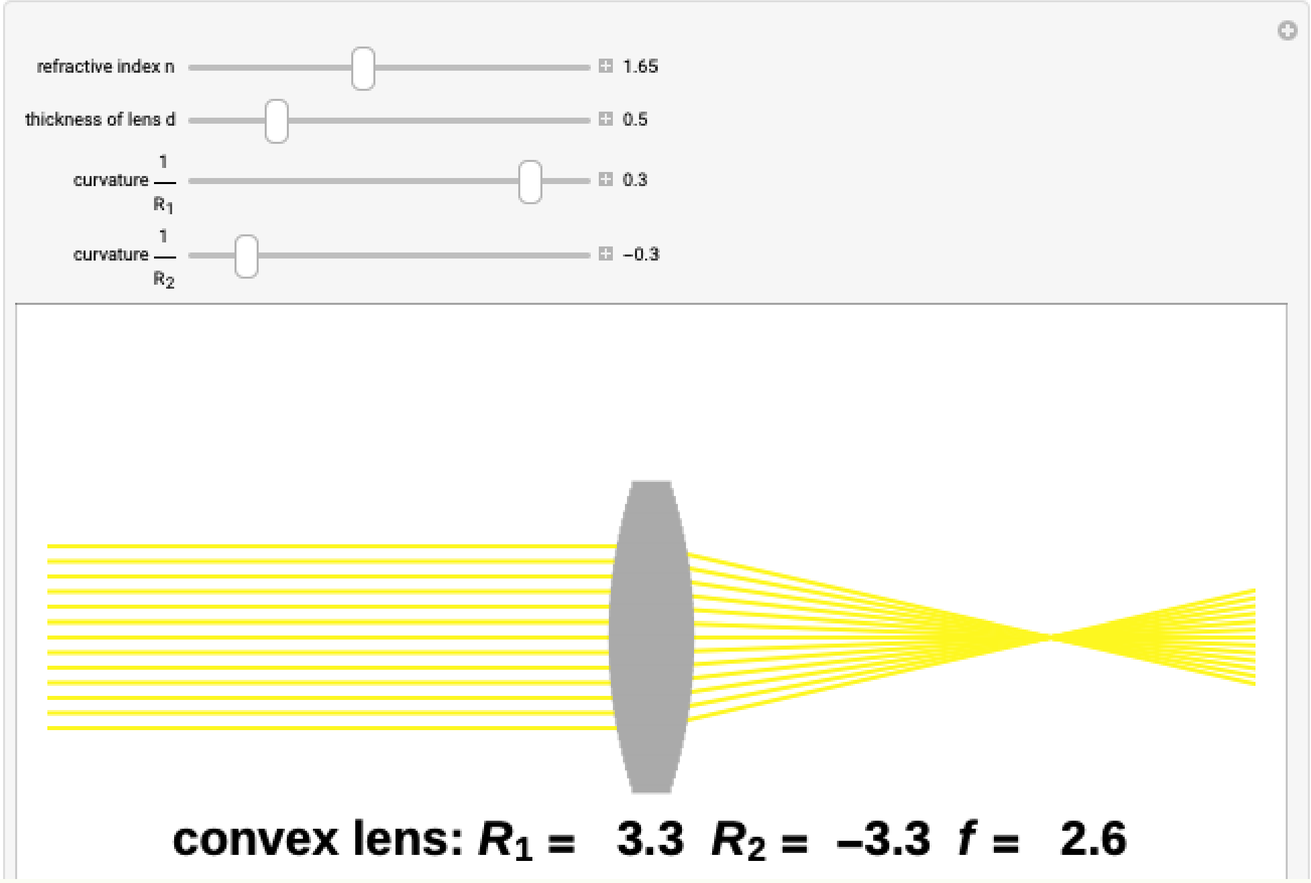

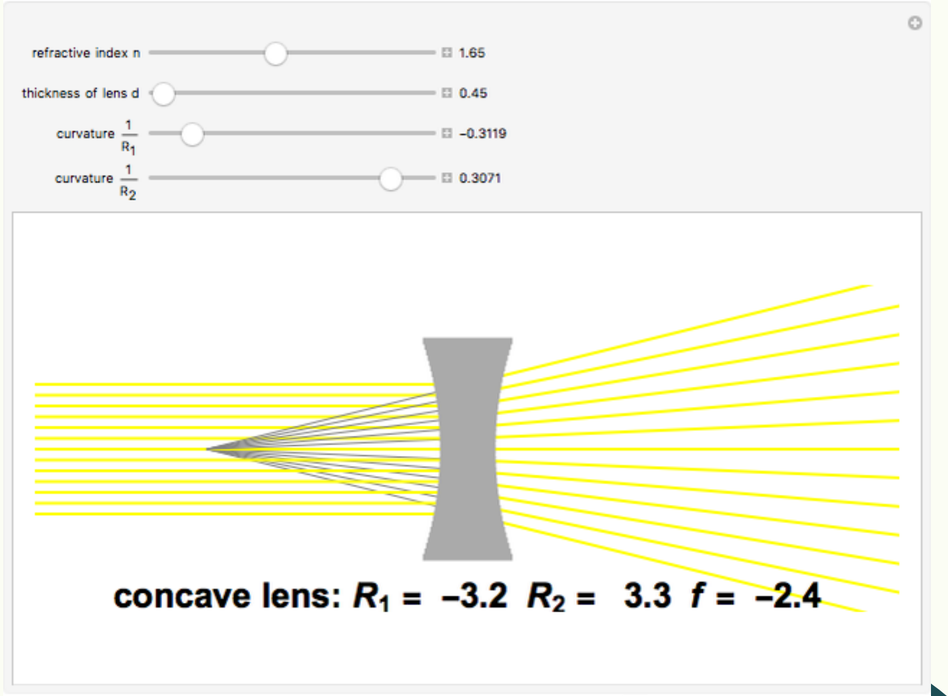

RESULTS Physics Motivation Profile

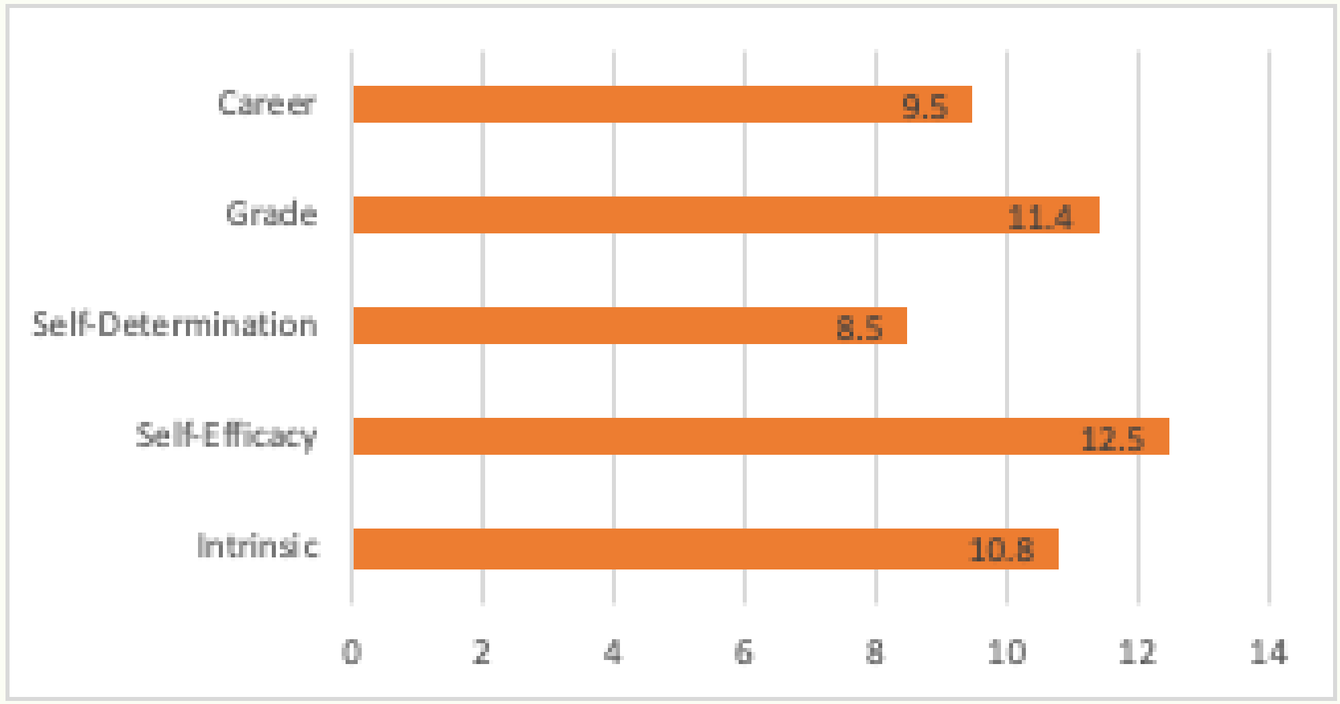

Figure 1. Mean score of Physics Motivation Scale II

Self-efficacy is the prominent motivation profile of the Grade 11 Kazakh Group students.

- *The student's perceived capabilities to learn or perform actions at designated levels*
- *Theory and research support the idea that self-efficacy is an essential motivational construct that can affect choices, effort, persistence, and achievement*

Hake Normalized Gain

$$g = \frac{\text{class av \% post-class av \% pre}}{100\% - \text{class av \% pre}}$$

Normalized gain score	Interpretation
(<g>)> 0.7	High
0.3 < (<g>)≤0.7	Middle
(<g>)≤0.3	Low

Table 1. Normalized gain score and its interpretation

RESULT

Effect of Open Inquiry Learning Model on the Concept and Mathematical Skills Attainment of Students

Problem 1: Effect of Open Inquiry Learning Model on the Concept Attainment of Students

N	Average Pre-test Score <Pre-test>	Average Post-test score <Post-test>	Hake gain <g>
24	40.9	84.5	0.74

Table 2. Normalized gains of students after the intervention

Conclusion

- The simulation-assisted open inquiry learning model in Physics effectively improved students' conceptual understanding and problem-solving skills in lens-maker equations. After implementing the intervention, students gained a high Hake gain (<g> = 0.74).
- Open inquiry allows students to gain deep conceptual learning of scientific concepts because students are engaged and involved in the actual learning process.
- Students have more opportunities to construct and acquire their knowledge and effectively reinforce student learning.

Recommendation

- the expansion of data gathering and analyses over a more extended period to obtain more comprehensive data
    - include constructs such as motivation and science process skills in the investigation
    - Qualitative methods may also be employed for more in-depth analyses of the effects of the open-inquiry learning model on students' learning.
    - Promotion and utilization of this learning pedagogy in the Physics Department of NIS FM Shymkent.

Implementation

Students taking the motivation scale survey, pretest and KWL Chart.

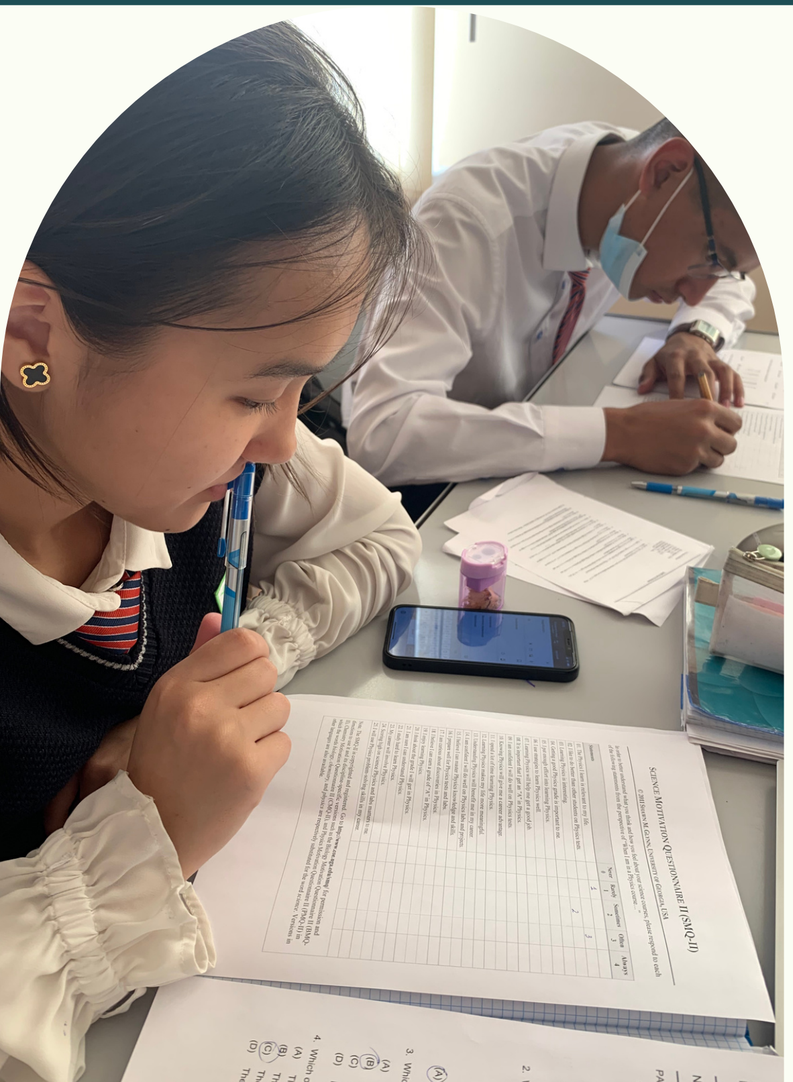

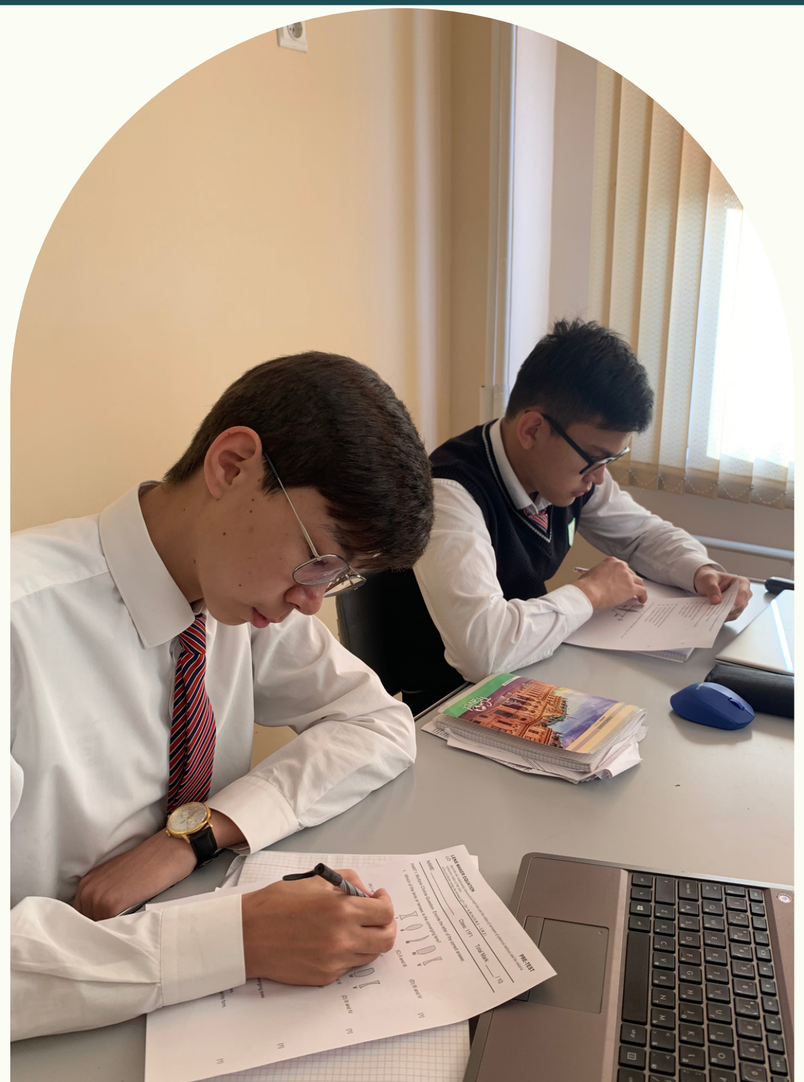

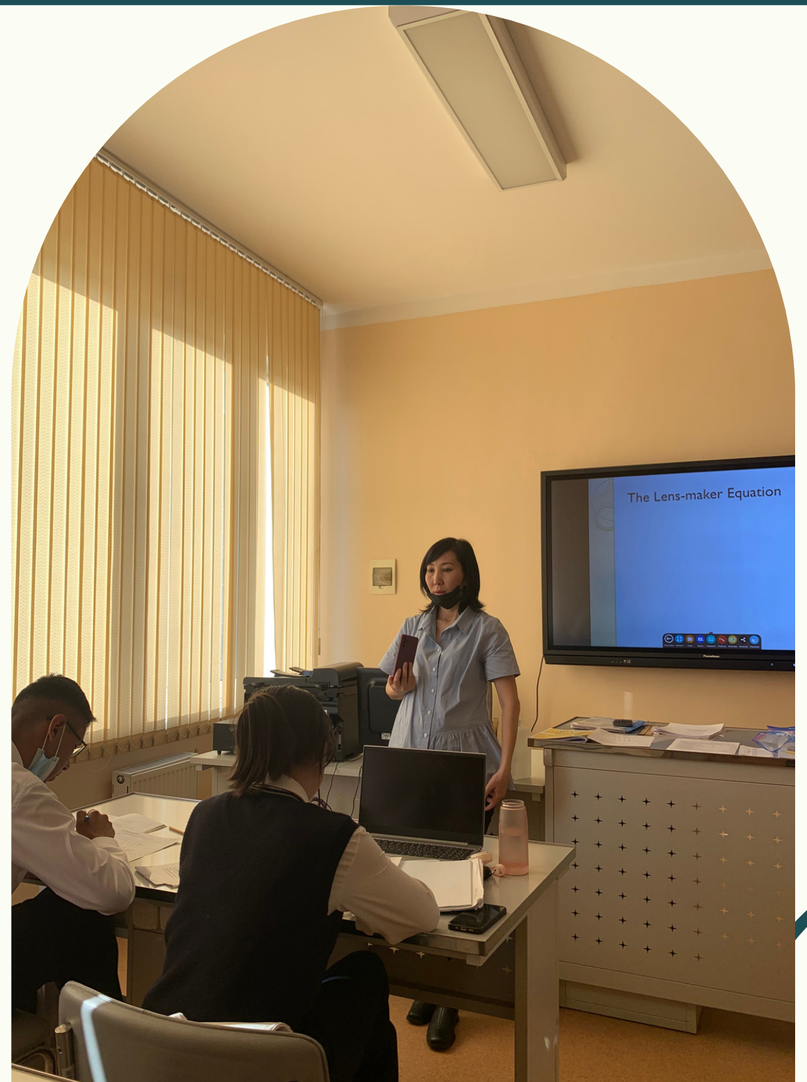

Group Work: Open-Inquiry using Wolfram Simulation on Lens-maker Equation

STUDENTS PRESENTING THEIR FINDINGS

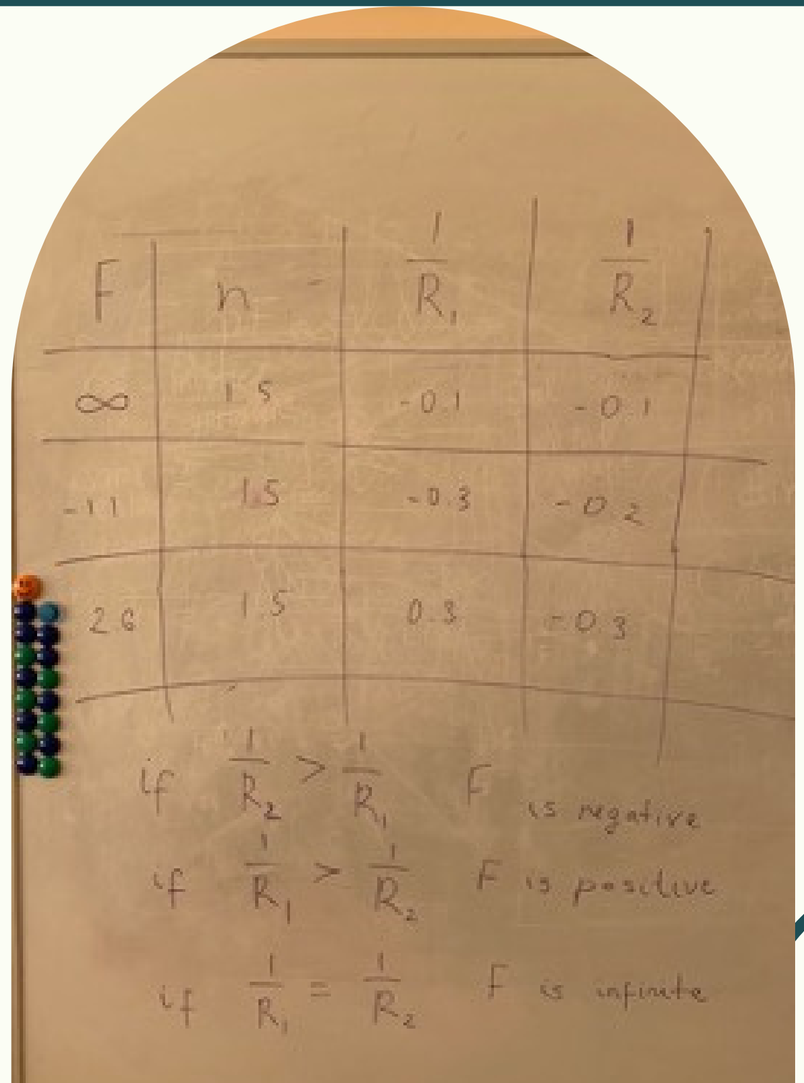

References

- Analytical report on the results of the external summative assessment of 12th grade students Nazarbayev Intellectual Schools in the SY 2020-2021 (2021): 56. Print.

- Abaniel, Arra. Q. “Enhanced Conceptual Understanding, 21st Century Skills And Learning Attitudes Through An Open Inquiry Learning Model In Physics.” Journal of technology and science education 11.1 (2021): 30-43. Web.

- Moser, Stephanie, Joerg Zumbach, and Ines Deibl. “The Effect of Metacognitive Training and Prompting on Learning Success in Simulation-based Physics Learning.” Science education (Salem, Mass.) 101.6 (2017): 944–967. Web.

- Abaniel, Arra Q. " Development and validation of 21st century skill instrument in Physics." The Normal Lights 3.9 (2017): 98-123. Web.

References

- https://deming.org/explore/pdsa/ (March 4, 2022)
- https://coe.uga.edu/outreach/programs/science-motivation/ (March 28, 2022)
- Schunk, Dale H., and DiBenedetto, Maria. K. “Social cognitive theory and motivation." The Oxford handbook of human motivation 2 (2012): 1-27. Web.

References

- Coletta, Vincent P., and Jeffrey J. Steinert. “Why Normalized Gain Should Continue to Be Used in Analyzing Preinstruction and Postinstruction Scores on Concept Inventories.” Physical review. Physics education research 16.1 (2020): 010108. Web.

- 5. Hake, Richard R. “Analyzing Change/Gain Scores* Dept. of Physics, Indiana University.” Https://Web.physics.indiana.edu/Sdi/AnalyzingChange-Gain.pdf, web.physics.indiana.edu/sdi/AnalyzingChange-Gain.pdf.

- Fernandez, Flavian Brian. “Action Research in the Physics Classroom: The Impact of Authentic, Inquiry-Based Learning or Instruction on the Learning of Thermal Physics.” Asia-Pacific Science Education 3.1 (2017): 1-20. Web.